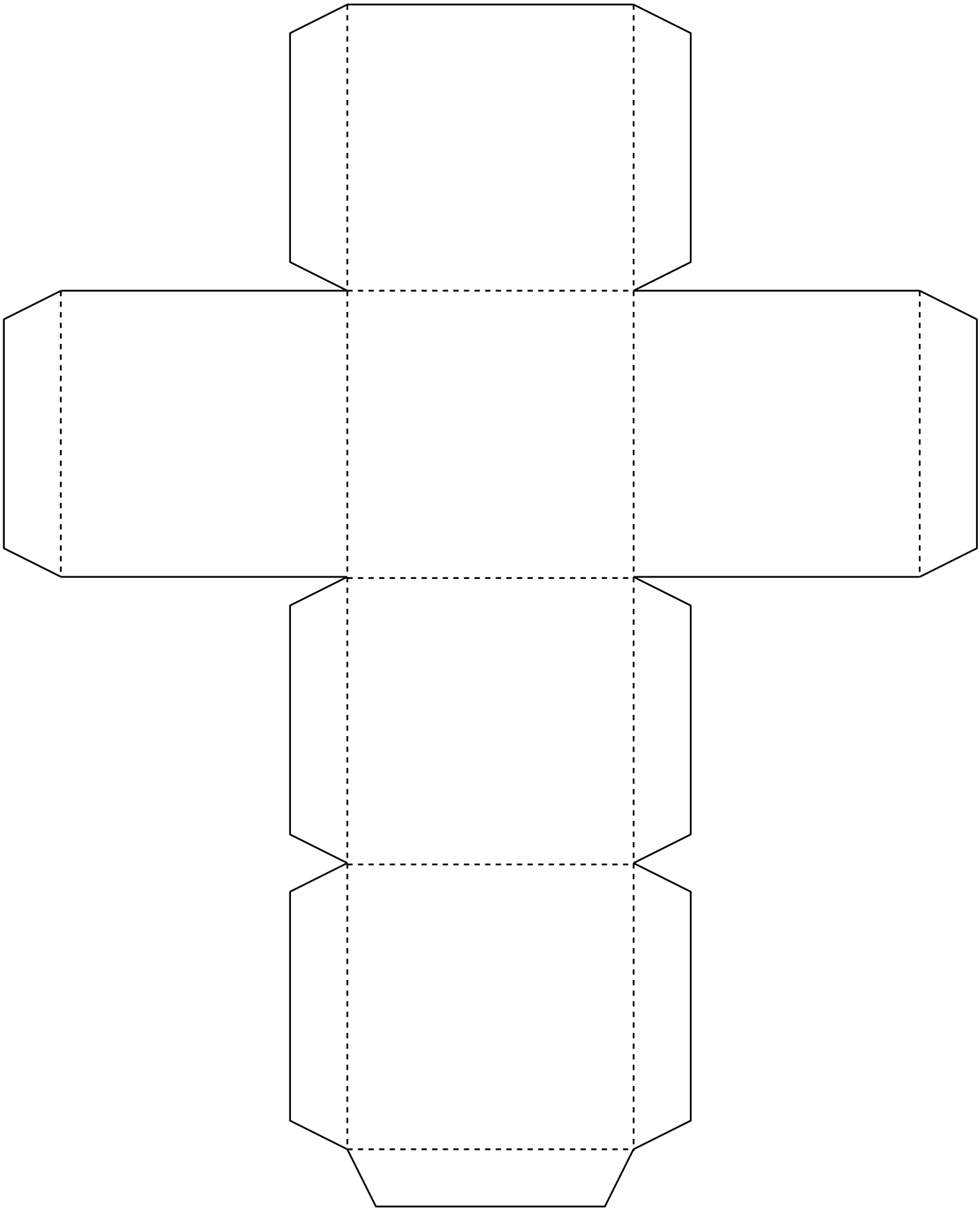

© ROOTS for Churches Limited www.rootsontheweb.com