Art and craft template to use with: ***Calm in the boat,*** *p29*

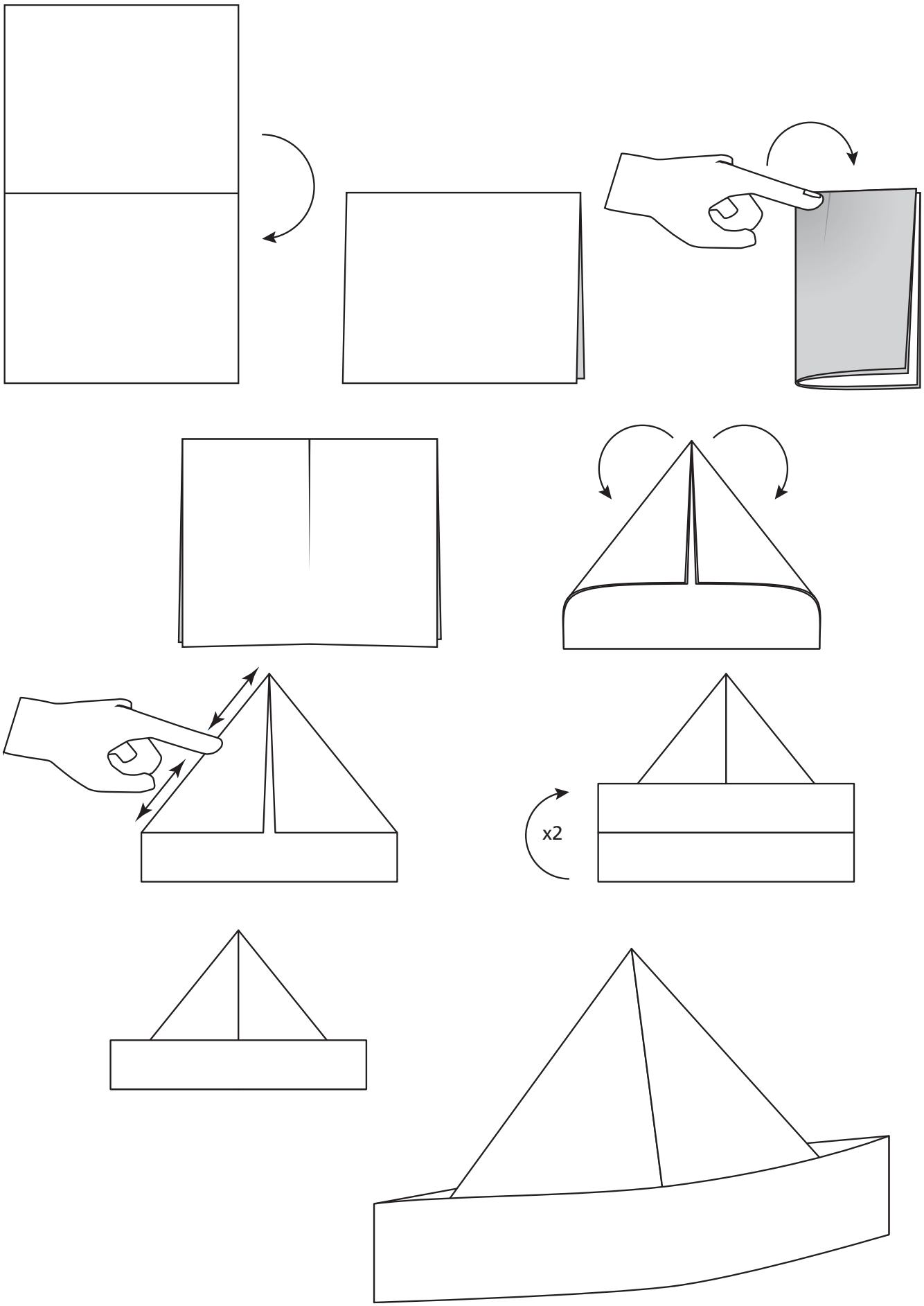

© ROOTS for Churches Limited